THIS DOCUMENT IS THE PROPERTY OF KEYSTONE ELECTRONICS CORP. AND SHALL NOT BE REPRODUCED, DISTRIBUTED OR USED AS A BASIS FOR MANUFACTURE WITHOUT PRIOR WRITTEN PERMISSION FROM KEYSTONE ELECTRONICS CORP.

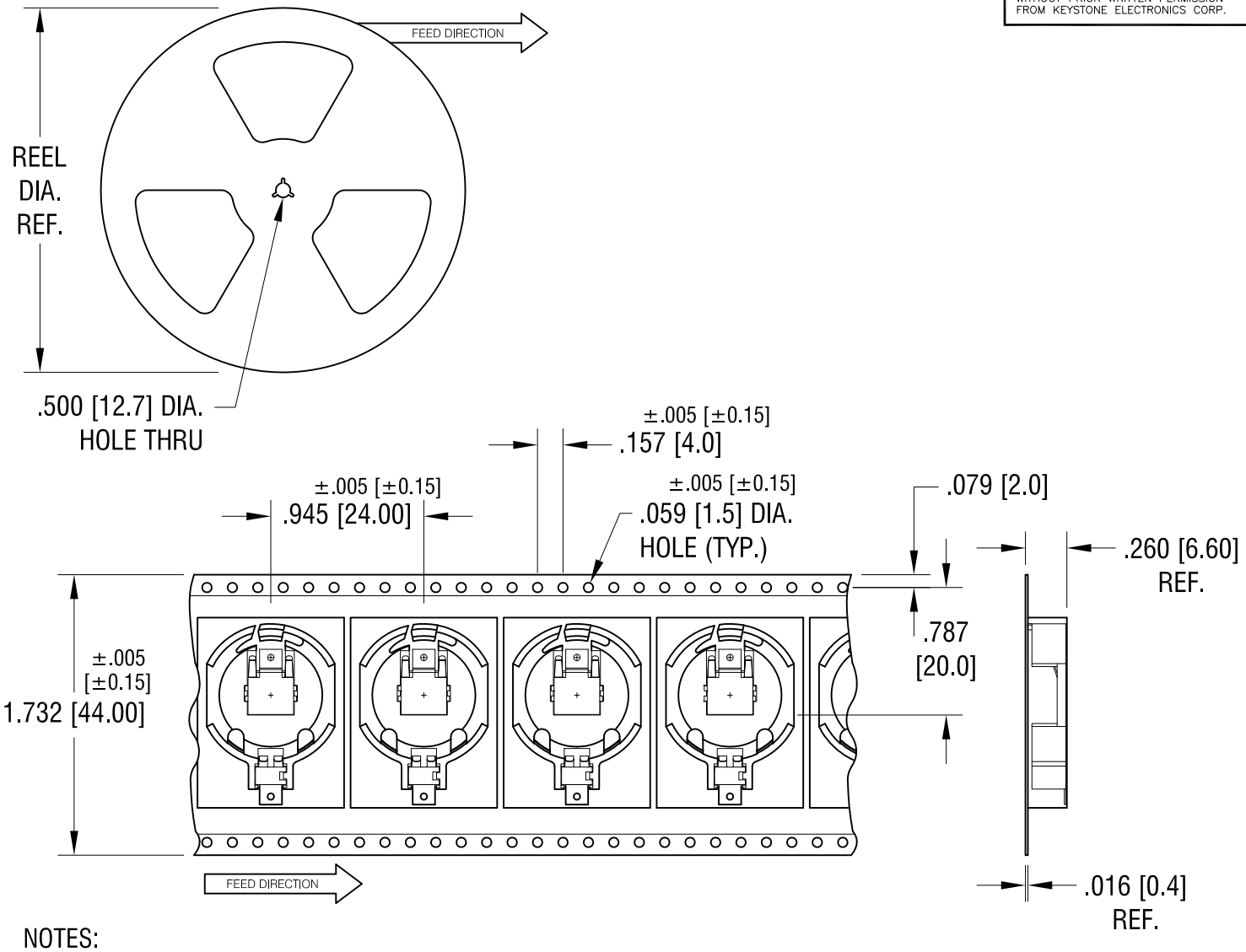

NOTES:

TAPE AND REEL SPECIFICATIONS:

1. TAPE:
   MAT'L - ALL CONDUCTIVE POLYSTYRENE CARRIER
   ANSI/EIA-481 STANDARD
   1.732 [44.0] WIDE;.945 [24.0] PITCH
2. REEL:
   13.0 [330.2] DIA. 400 PIECES OF
   PART NO. 1070 PER REEL.

DATE	DESCRIPTION	REV.

KEYSTONE ELECTRONICS CORP.

www.keyelco.com • ASTORIA, N.Y. 11105-2017 • Tel (718) 956-8900

PART NAME: SM COIN CELL HOLDER ON TAPE			
MATERIAL: AS NOTED			
FINISH: AS NOTED	DRN BY: NT	DATE: 1.15.14	
	APP'D: LN	SCALE: 1X	
TOLERANCES INCH [MM] DECIMAL ± .015 [± 0.38] ANGULAR ± 1° UNLESS OTHERWISE SPECIFIED	CODE: C	DWG NO.: 1070TR	