DATE	DESCRIPTION	REV.
8.10.00	CHANGE AS PER ECN 00–084	J
10.17.11	CHANGE AS PER ECN 11–134	K

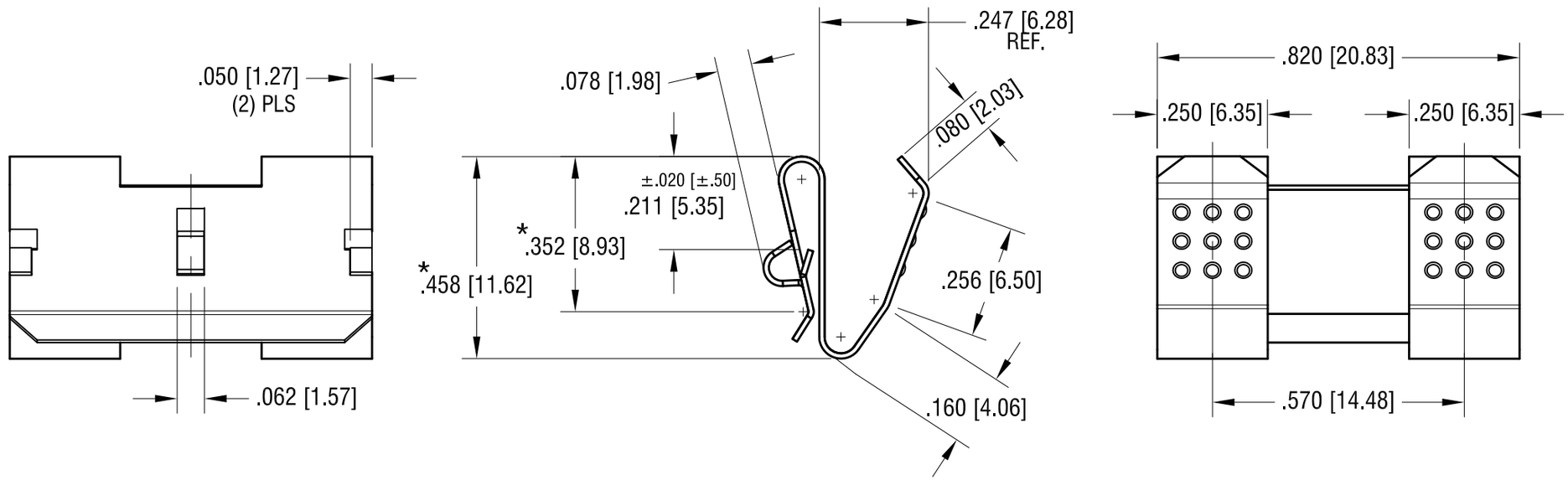

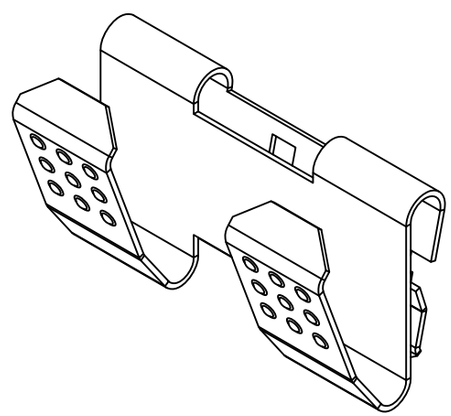

NOTE:

1. HEAT TREAT TO SPRING TEMPER.
2. DESIGNED TO CLIP OVER PANELS FROM .060 [1.52] THRU .070 [1.78] TH'K.
3. * DENOTES ±.015 [±.38] TOLERANCE

KEYSTONE ELECTRONICS CORP.

www.keyelco.com • ASTORIA, N.Y. 11105-2017 • Tel (718) 956-8900

PART NAME	DUAL 'A'-'AA' CONTACT		
MATERIAL	.012 [.30] TH'K ANNEALED SPRING STEEL		
FINISH	NICKEL PLATE	DRN BY BOONE	DATE 12.9.82
		APP'D LN	SCALE 3X
TOLERANCES INCH [MM] DECIMAL ± .010 [± 0.25] ANGULAR ± 1° UNLESS OTHERWISE SPECIFIED	CODE C	DWG NO. 210	